

KBR BLADE BIM 360

CS323105 - How Industrial Construction Can Use Field Mobility (R0)

Mark Mehta – KBR

Proud history, bright future.

©2019 KBR Inc. All Rights Reserved.

Safety Topic – KBR Standard

- Every other vehicle on the road is a safety hazard
- Momentum is mass x velocity
- Mass = 4,000 pounds (1814 kilograms)
- Velocity = 70 mph (31 mps)
- Momentum = 28,000 lbs x m/h
- Head-on collision?
  - Now double it

©2019 KBR Inc. All Rights Reserved.

Safety Topic – Every Other Vehicle is a Hazard

- That car came out of nowhere!



Proud history, bright future.

©2019 KBR Inc. All Rights Reserved.

Safety Topic – Site Specific

- Onsite incident
- Added flaggers
- Added “Logistics Coordinator”
- “Accidents are preventable…not inevitable”

Proud history, bright future.

©2019 KBR Inc. All Rights Reserved.

Safety Topic – Repercussions



Proud history, bright future.

©2019 KBR Inc. All Rights Reserved.

Mark Mehta Introduction



Proud history, bright future.

©2019 KBR Inc. All Rights Reserved.

In the beginning…

- There was a small ammonia plant on the Texas gulf coast
  - Initial introduction to BIM 360
  - Informal
  - Discovered the potential!

- Then there was Project Earth for Chemours in Corpus Christi, TX
  - Connie McLaughlin and Chris McDowra
  - Presented at Autodesk University last year and AWP Conference 2018 and 2019
  - Did it “right”
  - …actual full deployment with Autodesk

Proud history, bright future.

©2019 KBR Inc. All Rights Reserved.

Project Earth

- Successful uses:
  - 3D model
  - Documents: equivalent to 4 feet high stack of paper
  - RFI initiation
  - Work packages for all disciplines
  - System walkdowns
  - Punch listing
  - Capturing redlines in the field
- Copy Earth config
- Copy Earth process

Proud history, bright future.

©2019 KBR Inc. All Rights Reserved.

BLADE – Project Info

- Beaumont Light Atmospheric Distillation Expansion
- ExxonMobil
- In Beaumont, TX (1.5 hours from Houston)
- OSBL: Outside Battery Limits
- Relatively small project for KBR standards
- But quite spread out
- All the more reason for BIM 360!
- Tremendous ExxonMobil support: Help drive the process and enhancements

Proud history, bright future.

©2019 KBR Inc. All Rights Reserved.

Plot Plan

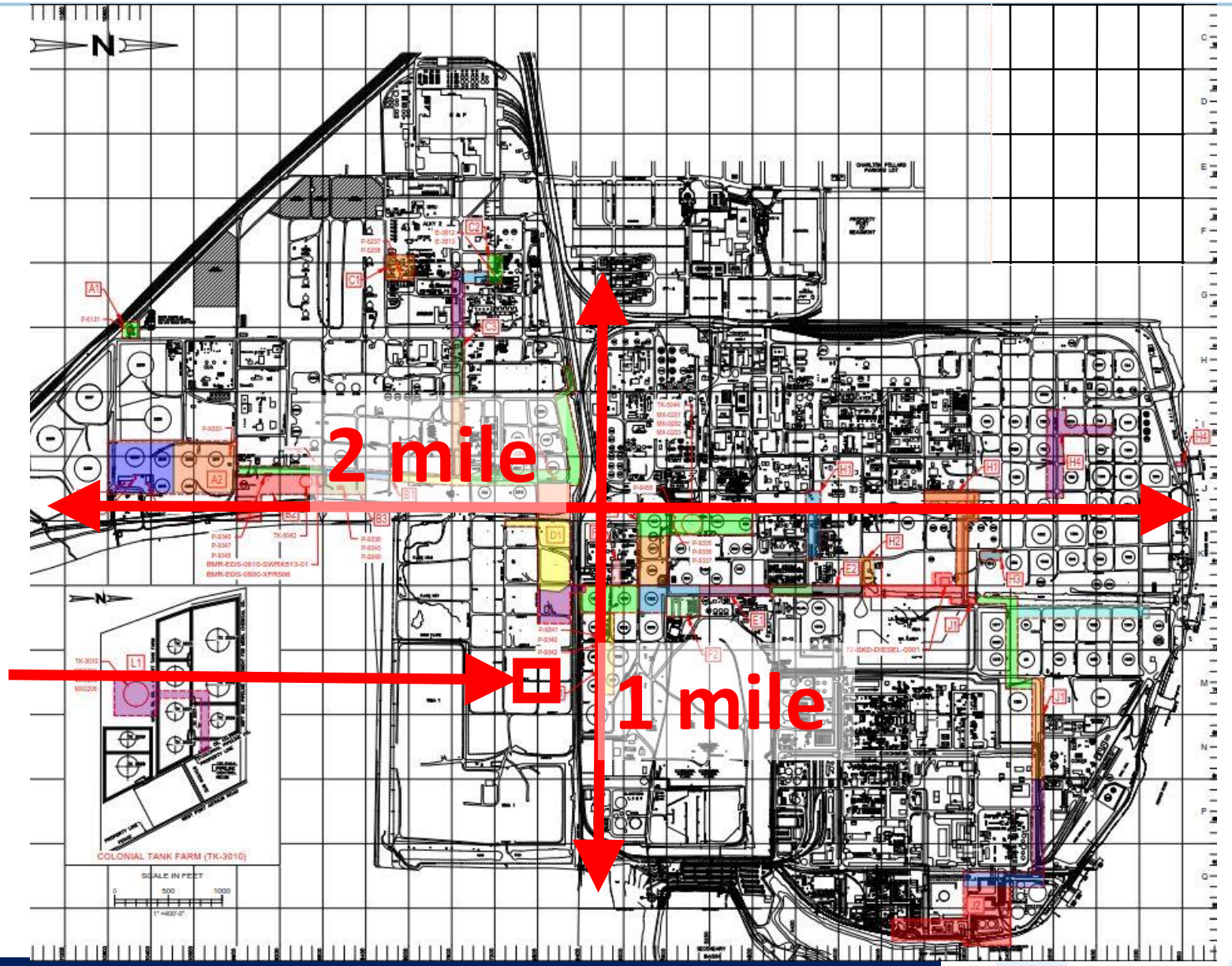

Proud history, bright future.

©2019 KBR Inc. All Rights Reserved.

BLADE – Expand on Previous KBR Success

- Brockwell IT (now Esri) Documentum to BIM 360
  - Four times as many documents
  - Project BLADE percent complete
    - Engineering: 88.9% complete
    - Procurement: 51.3% complete
    - Construction: 4.7% complete
- Open PDF ISOs directly from the 3D VCM
  - Virtual Construction Model
  - Implemented by Autodesk
- Field delays
  - Captured directly by the construction craft from the field
- ITR (Installation Test Records)
  - QC Checksheets
- Capture progress
  - Future
  - Does not change the process

Proud history, bright future.

©2019 KBR Inc. All Rights Reserved.

Capture Progress

Since progress is captured at the component level, and drawings, IWPs, and systems are in Cobra, can report progress and productivity at the IWP and turnover system level

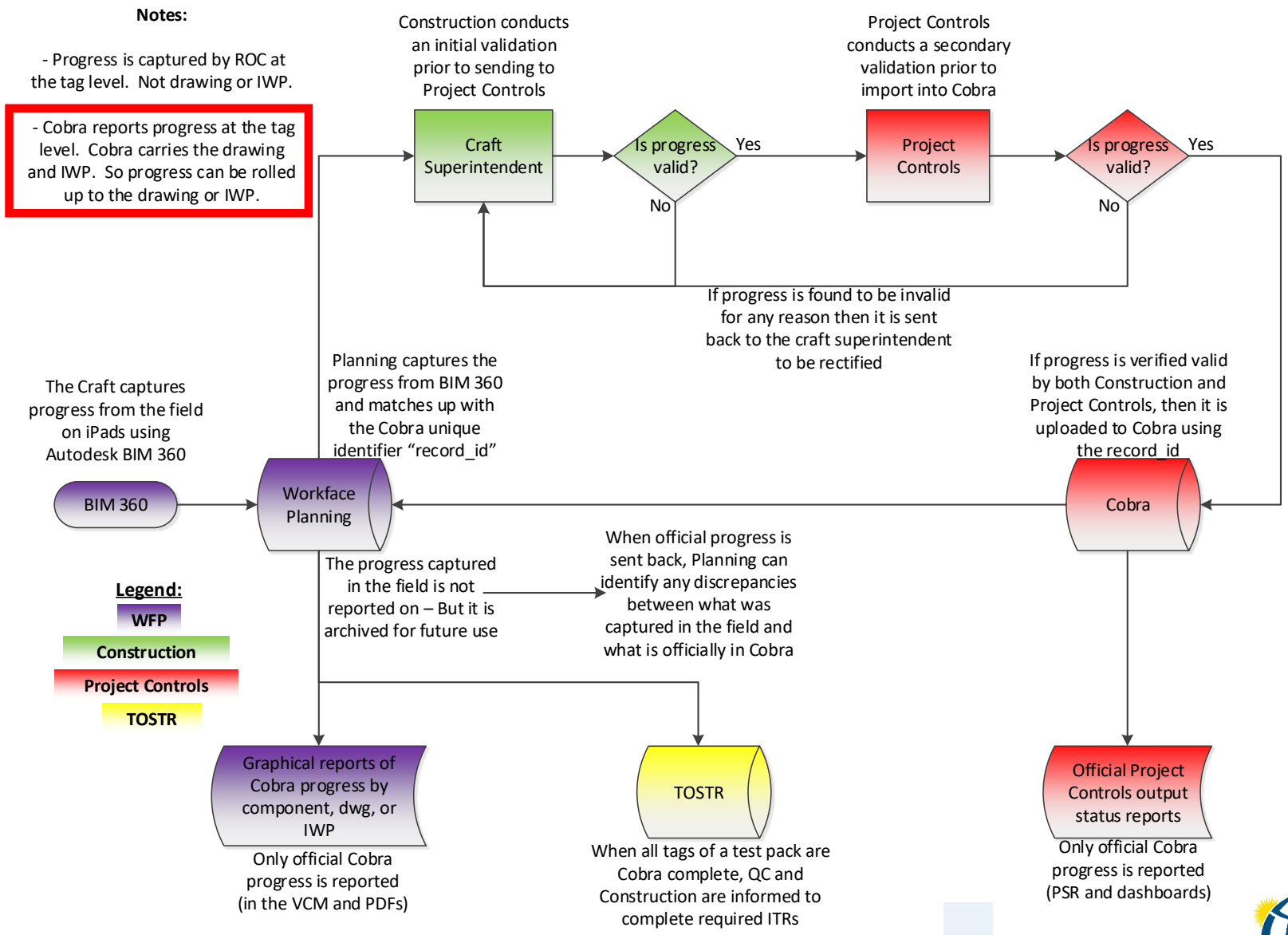

Proud history, bright future.

©2019 KBR Inc. All Rights Reserved.

Brockwell IT (now Esri) Documentum to BIM 360

- All required docs from KBR Document Management System “Documentum” by OpenText
- Nightly delta
- Configurable
  - Config file
  - Strip out folders
  - Add folders
  - Configuration good / customization bad
- “Automagical”

Proud history, bright future.

©2019 KBR Inc. All Rights Reserved.

Native Model

- CWPs and EWPs
  - Construction Work Packages
  - Engineering Work Packages
  - All Disciplines
  - Site plot plan
  - AWP:
  - “All Works Perfectly”

Proud history, bright future.

©2019 KBR Inc. All Rights Reserved.

CWPs and EWPs in Native Model

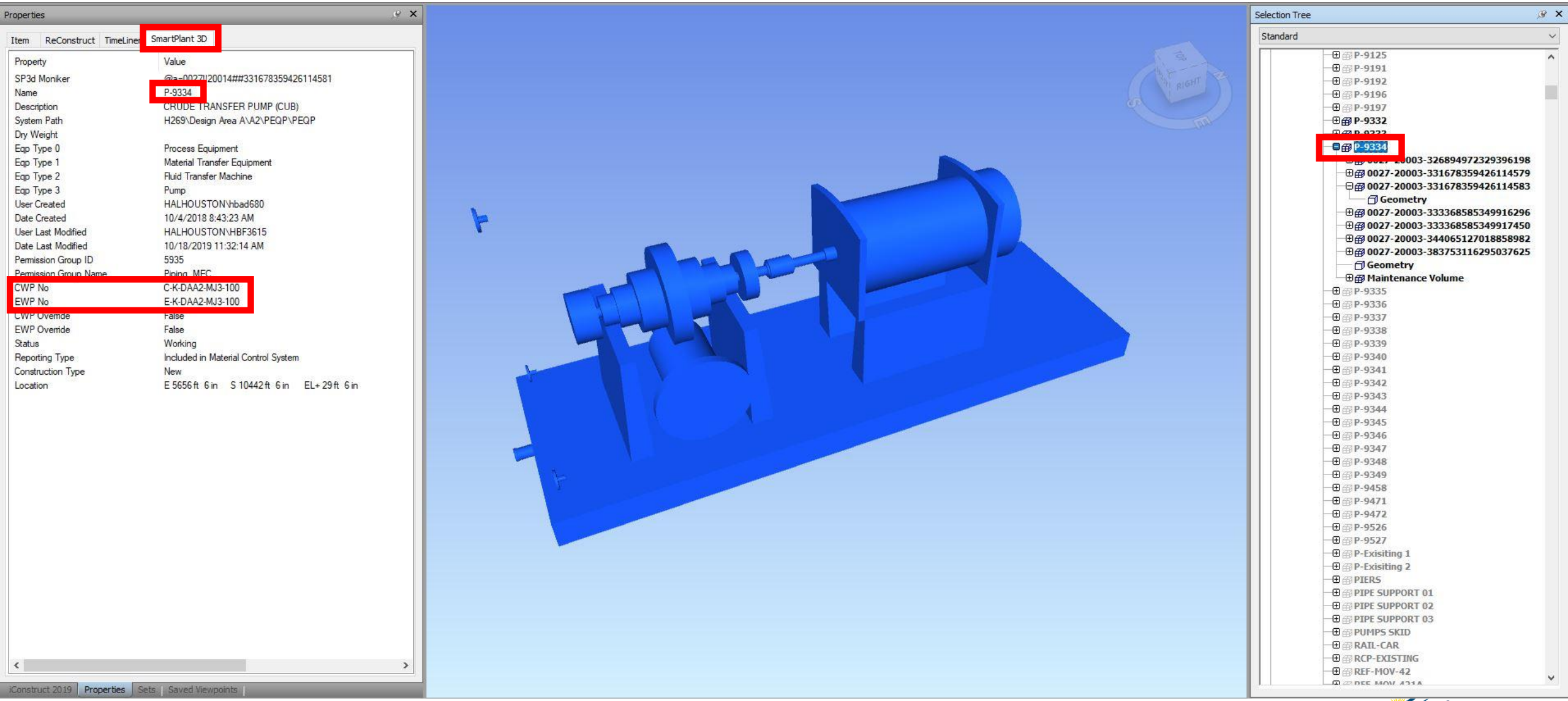

Proud history, bright future.

©2019 KBR Inc. All Rights Reserved.

Model Conditioning – Concatenate ISO Sheet Number

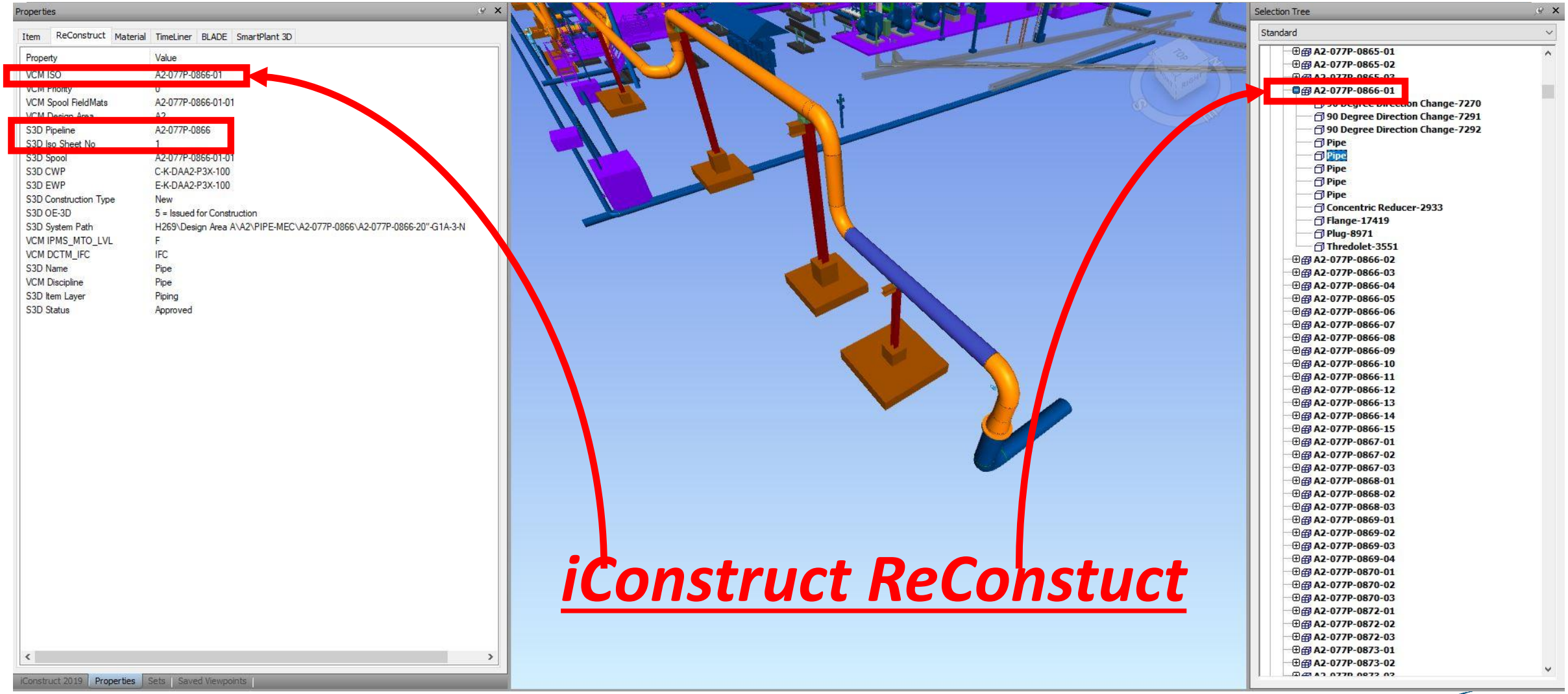

Proud history, bright future.

©2019 KBR Inc. All Rights Reserved.

Model Conditioning – Remove Blockout Access Ways

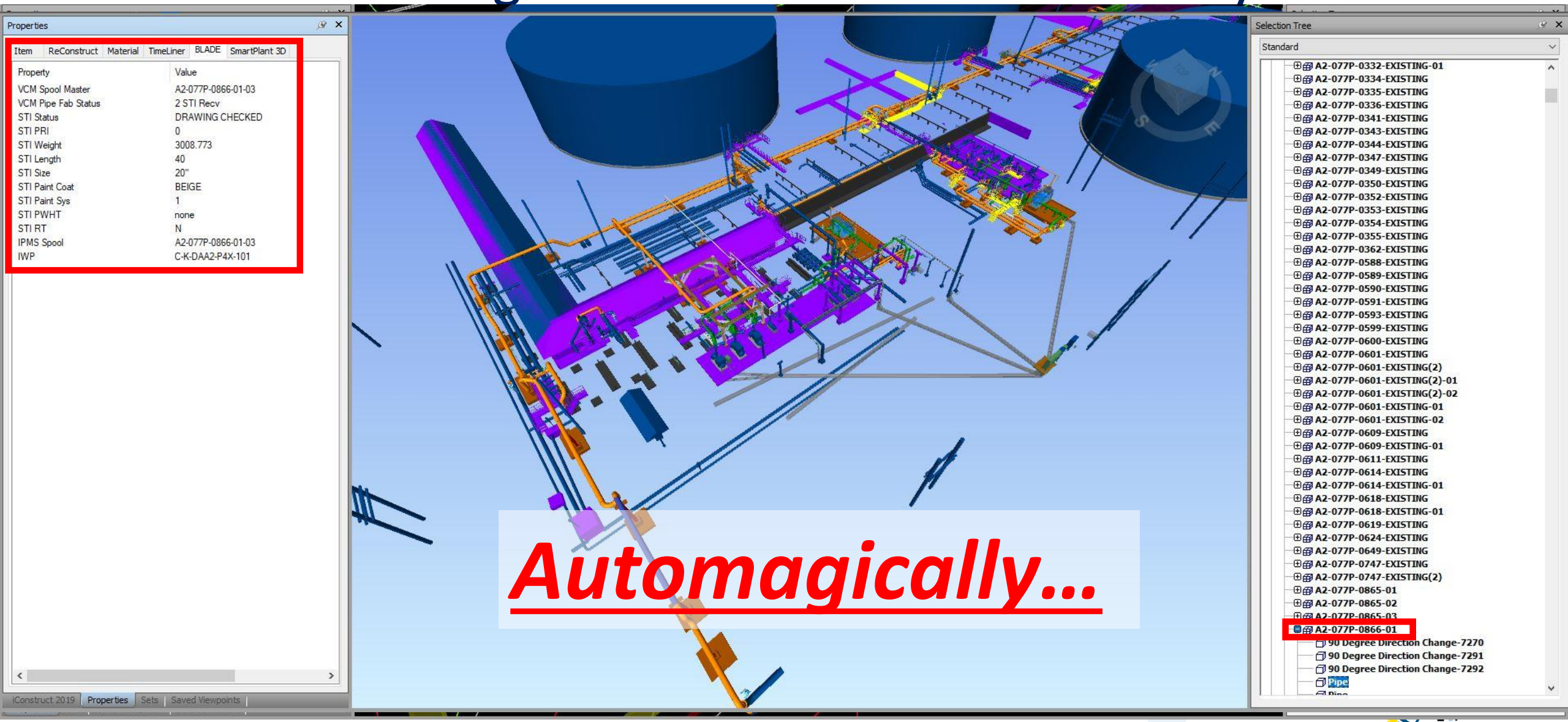

Proud history, bright future.

©2019 KBR Inc. All Rights Reserved.

Model Conditioning – Add Design Areas and Discipline

- Parsed from S3D System Path
- Construction Disciplines
  - As opposed to engineering design disciplines

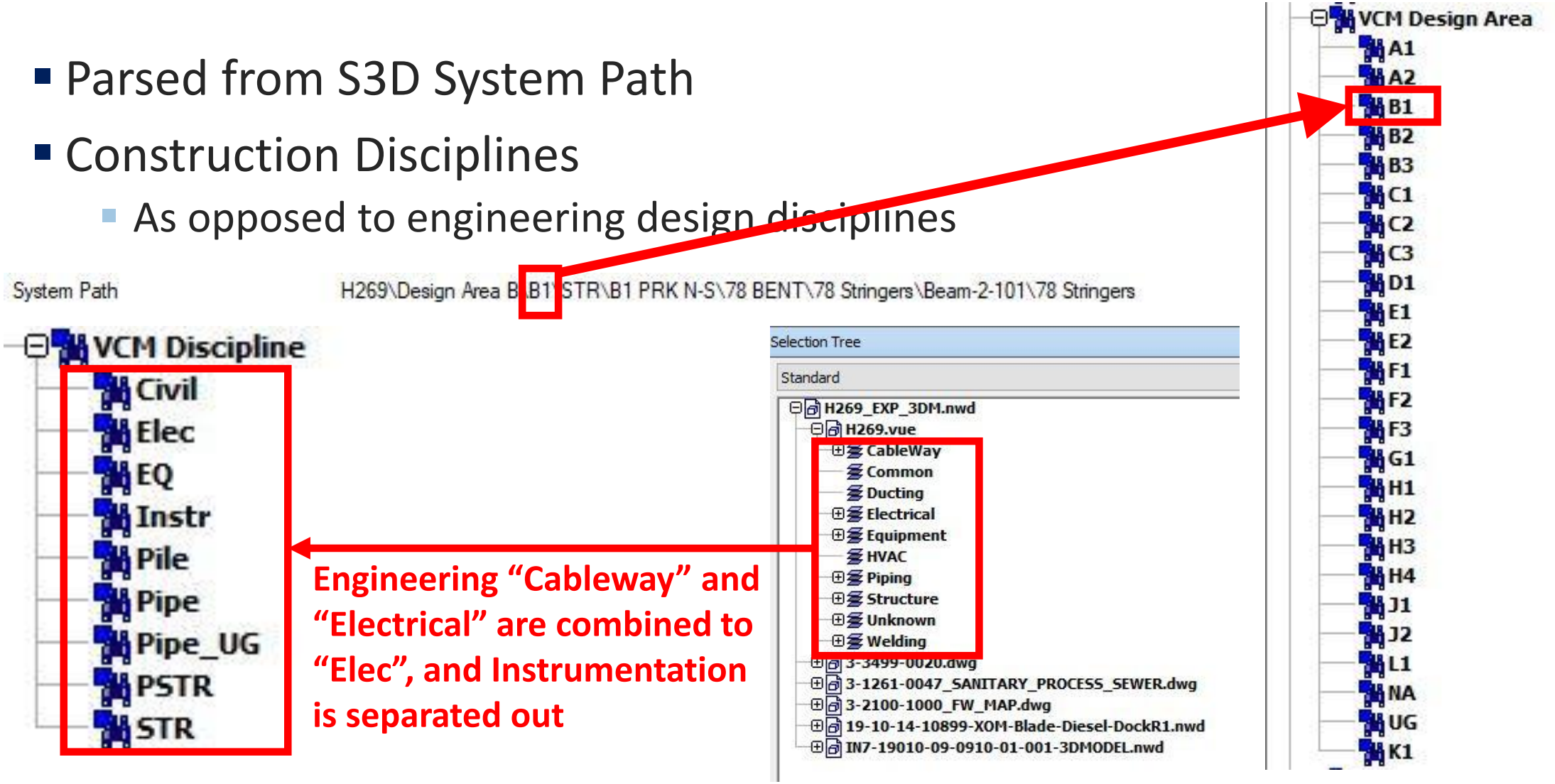

Proud history, bright future.

©2019 KBR Inc. All Rights Reserved.

Static Data

- Read-only Navisworks Simulate Properties tab
  - Pipe isometric (ISOs) names
  - Material drawing status
  - IFC status
- iConstruct
  - Navisworks Simulate plug-in
  - *IE: Automagically…*

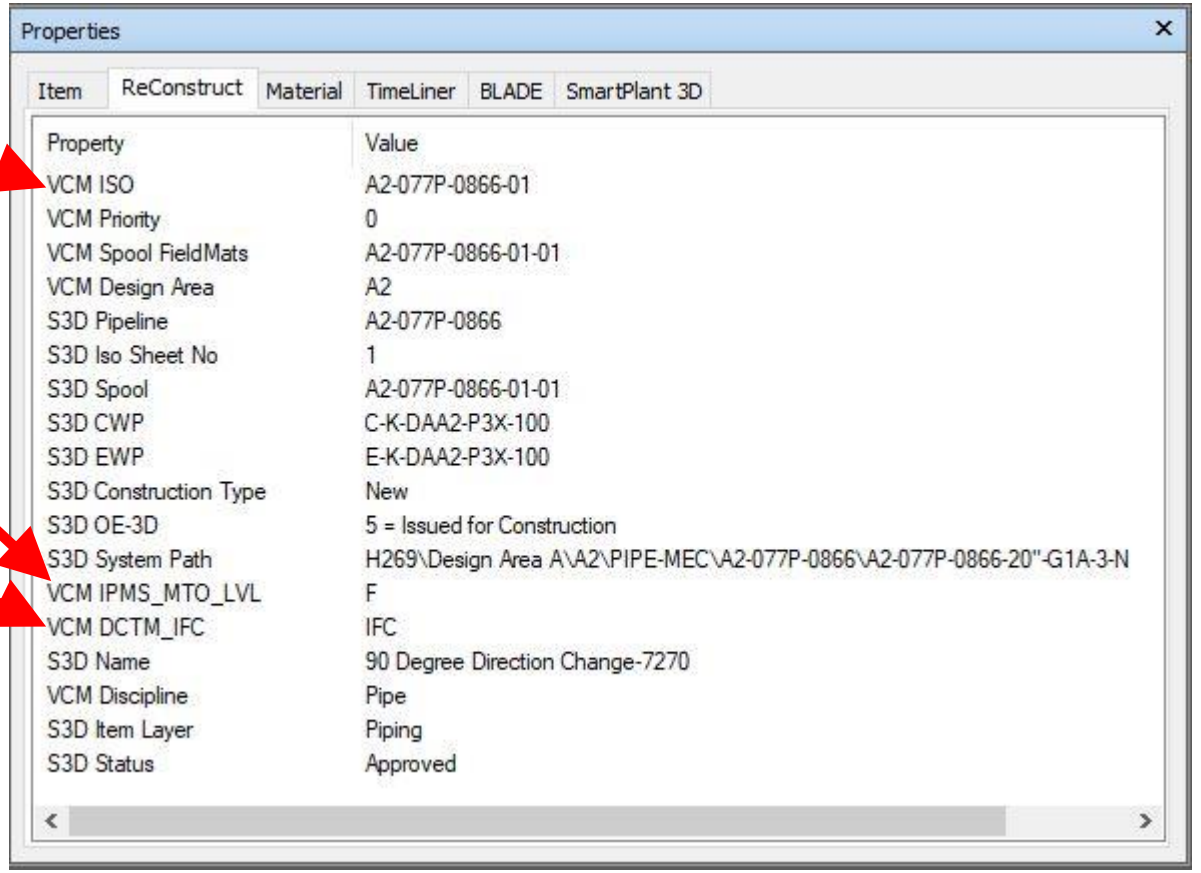

Proud history, bright future.

©2019 KBR Inc. All Rights Reserved.

Editable Properties Tab

- Pipe fabrication status
- Pipe Installation Work Packages (IWPs)
- Steel progress
- Steel materials
- Foundation progress
- Pipe progress (next…)

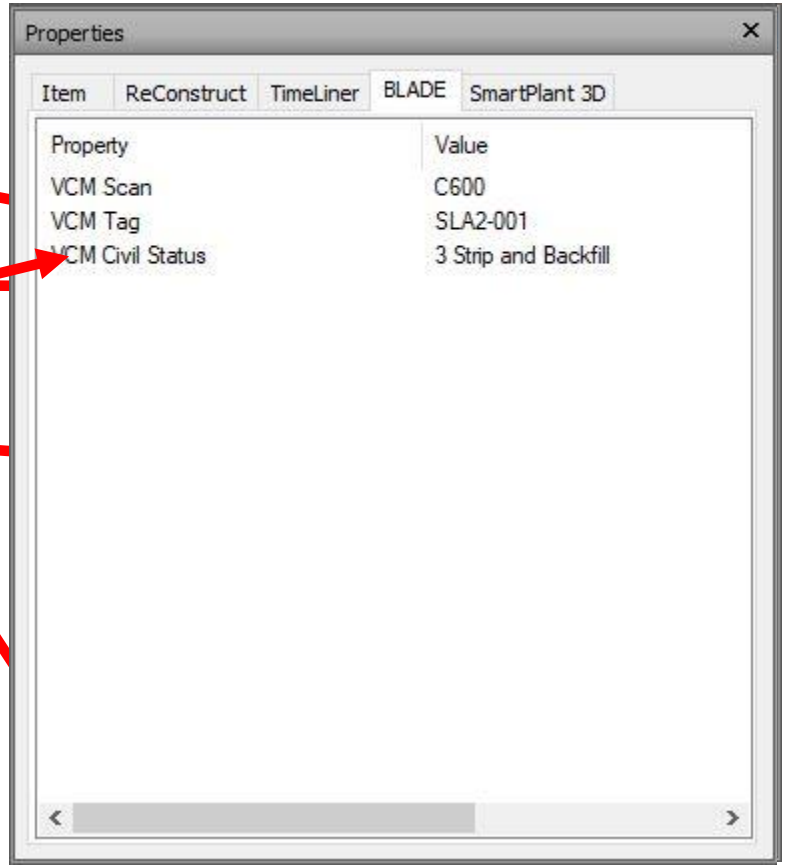

Proud history, bright future.

©2019 KBR Inc. All Rights Reserved.

Static Data – “Dummy Buttons”

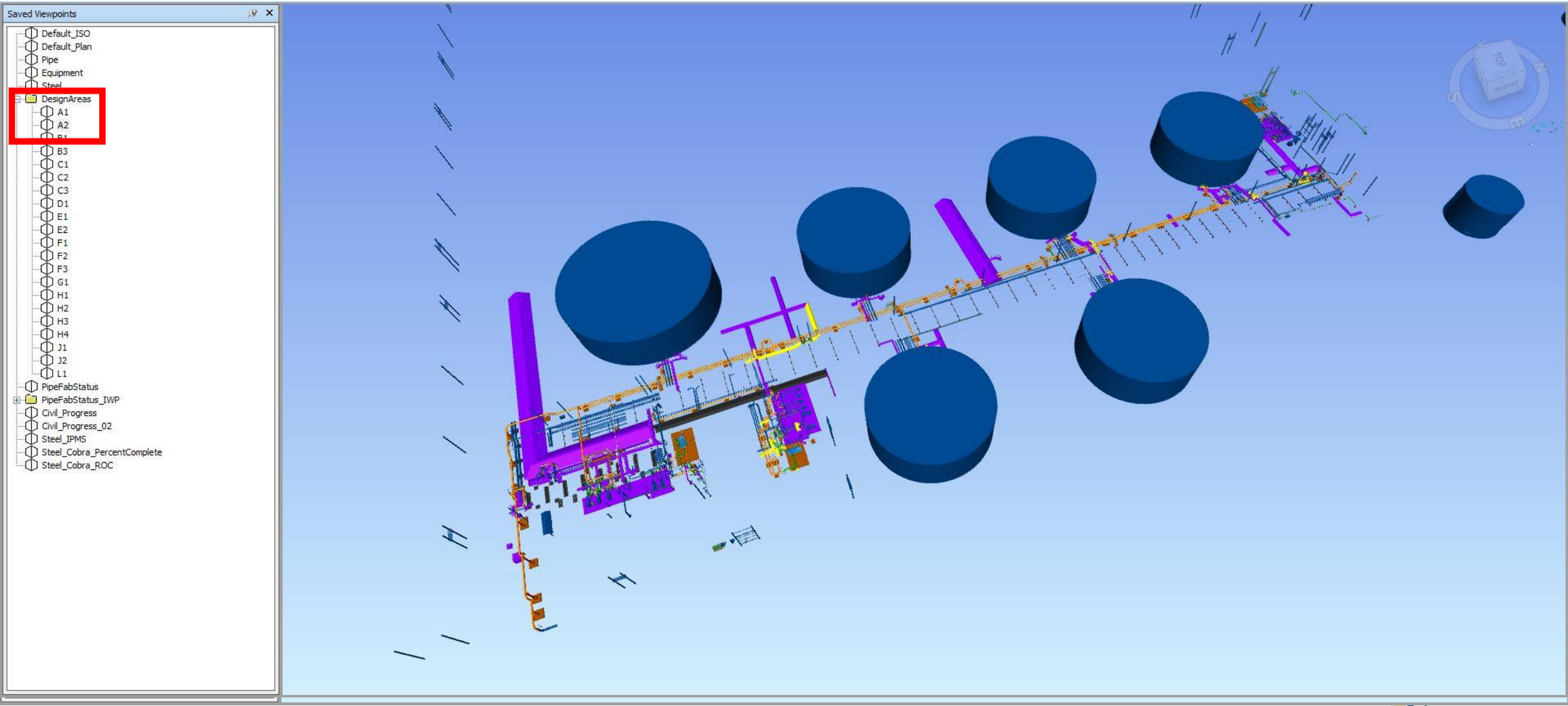

Proud history, bright future.

©2019 KBR Inc. All Rights Reserved.

Greg Smith – Millwright General Foreman

- Not so much paper
- All right here
- Saves footsteps
- Gathers info – Keeps everyone together
- Find pictures
- Not that good on a computer
  - “Here we go again…”
- Simple

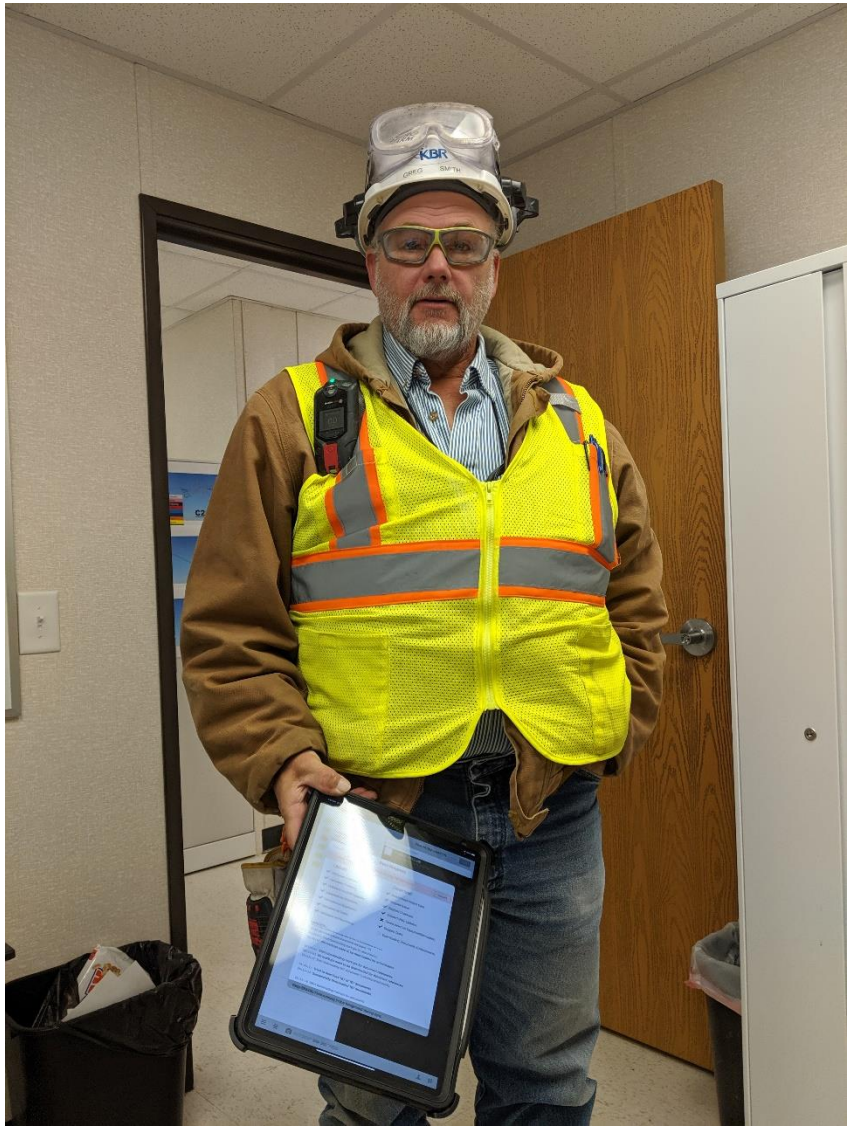

Proud history, bright future.

©2019 KBR Inc. All Rights Reserved.

Automagical

- At some point…
- Somebody…
- Has to do…
- Something.

- More automation requires more support

Proud history, bright future.

©2019 KBR Inc. All Rights Reserved.

Interface Details

- What is the file format?
  - Excel, txt, csv, database connection string?
- What is the frequency?
  - Live, realtime, daily, schedule task or manual?
- What columns?
  - Defined column width, comma separated, etc…
- Append new data or complete refresh?
  - Don’t overwrite good data…
- Who is the responsible party
  - …and who is their backup?

Proud history, bright future.

©2019 KBR Inc. All Rights Reserved.

Data Interfaces

- Line on a Visio
- What is the line?
  - "A tie between two systems"



Proud history, bright future.

©2019 KBR Inc. All Rights Reserved.

Progress to VCM in the Field

- ROCs (rules of credit) with quantities
- End result is color code in the model in BIM 360
- Format from Cobra progress measurement system
- Format into VCM
- Go from one to the others:
  - Database queries

Proud history, bright future.

©2019 KBR Inc. All Rights Reserved.

Pipe Progress Measurement

	A	B	C	D	E	F	G	H	I	J	K	L	M	N	O	P	Q	R	S	T	U	V
1	drawing_no	d7	to_qty	to_hrs	ms1	s_wt1	ms_qty1	ms2	s_wt2	ms_qty2	ms3	s_wt3	ms_qty	ms4	s_wt4	ms_qty4	ms5	s_wt5	ms_qty5	ms6	s_wt6	ms_qty6
2	501-BBD-5102001-01	501-BBD-5102001-01-01	20.417	53.2791594	ERECT SPOOL	25	20.4166	CONNECT (ONE END)	20	20.4166	CONNECT (OTHER END)	20	20.4166	TRIM	15	20.4166	READY FOR TEST	10	20.4166	MECHANICAL COMPLETE	10	20.4166
3	501-BBD-5102001-01	501-BBD-5102001-01-02	16.25	42.406	ERECT SPOOL	25	16.25	CONNECT (ONE END)	20	16.25	CONNECT (OTHER END)	20	16.25	TRIM	15	16.25	READY FOR TEST	10	16.25	MECHANICAL COMPLETE	10	16.25
4	501-BBD-5102001-01	501-BBD-5102001-01-03	10.417	27.1831594	ERECT SPOOL	25	10.4166	CONNECT (ONE END)	20	10.4166	CONNECT (OTHER END)	20	10.4166	TRIM	15	10.4166	READY FOR TEST	10	10.4166	MECHANICAL COMPLETE	10	10.4166
5	501-BBD-5102001-01	501-BBD-5102001-01-04	10.5	27.4008	ERECT SPOOL	25	10.5	CONNECT (ONE END)	20	10.5	CONNECT (OTHER END)	20	10.5	TRIM	15	10.5	READY FOR TEST	10	10.5	MECHANICAL COMPLETE	10	10.5
6	501-BBD-5102002-01	501-BBD-5102002-01-01	18.917	38.6163472	ERECT SPOOL	25	18.9166	CONNECT (ONE END)	20	18.9166	CONNECT (OTHER END)	20	18.9166	TRIM	15	18.9166	READY FOR TEST	10	18.9166	MECHANICAL COMPLETE	10	18.9166
7	501-BBD-5102002-01	501-BBD-5102002-01-02	22.5	45.9315	ERECT SPOOL	25	22.5	CONNECT (ONE END)	20	22.5	CONNECT (OTHER END)	20	22.5	TRIM	15	22.5	READY FOR TEST	10	22.5	MECHANICAL COMPLETE	10	22.5
8	501-BBD-5102002-01	501-BBD-5102002-01-03	13	26.5382	ERECT SPOOL	25	13	CONNECT (ONE END)	20	13	CONNECT (OTHER END)	20	13	TRIM	15	13	READY FOR TEST	10	13	MECHANICAL COMPLETE	10	13
9	501-BBD-5102004-01	501-BBD-5102004-01-01	20.417	53.2791594	ERECT SPOOL	25	20.4166	CONNECT (ONE END)	20	20.4166	CONNECT (OTHER END)	20	20.4166	TRIM	15	20.4166	READY FOR TEST	10	20.4166	MECHANICAL COMPLETE	10	20.4166
10	501-BBD-5102004-01	501-BBD-5102004-01-02	30.333	79.1577797	ERECT SPOOL	25	30.3333	CONNECT (ONE END)	20	30.3333	CONNECT (OTHER END)	20	30.3333	TRIM	15	30.3333	READY FOR TEST	10	30.3333	MECHANICAL COMPLETE	10	30.3333
11	501-BBD-5102005-01	501-BBD-5102005-01-01	43.75	89.000625	ERECT SPOOL	25	43.75	CONNECT (ONE END)	20	43.75	CONNECT (OTHER END)	20	43.75	TRIM	15	43.75	READY FOR TEST	10	43.75	MECHANICAL COMPLETE	10	43.75
12	501-BBD-5102005-01	501-BBD-5102005-01-02	25.33	51.528819	ERECT SPOOL	25	25.33	CONNECT (ONE END)	20	25.33	CONNECT (OTHER END)	20	25.33	TRIM	15	25.33	READY FOR TEST	10	25.33	MECHANICAL COMPLETE	10	25.33
13	501-BBD-5102005-01	501-BBD-5102005-01-03	3.26	6.631818	ERECT SPOOL	25	3.26	CONNECT (ONE END)	20	3.26	CONNECT (OTHER END)	20	3.26	TRIM	15	3.26	READY FOR TEST	10	3.26	MECHANICAL COMPLETE	10	3.26
14	501-BBD-5102005-02	501-BBD-5102005-02-01	10.083	20.5124572	ERECT SPOOL	25	10.0833	CONNECT (ONE END)	20	10.0833	CONNECT (OTHER END)	20	10.0833	TRIM	15	10.0833	READY FOR TEST	10	10.0833	MECHANICAL COMPLETE	10	10.0833
15	501-BBD-5102005-02	501-BBD-5102005-02-02	3.8333	7.79808219	ERECT SPOOL	25	3.8333	CONNECT (ONE END)	20	3.8333	CONNECT (OTHER END)	20	3.8333	TRIM	15	3.8333	READY FOR TEST	10	3.8333	MECHANICAL COMPLETE	10	3.8333
16	501-BBD-5102005-02	501-BBD-5102005-02-02	3	5.5218	ERECT SPOOL	25	3	CONNECT (ONE END)	20	3	CONNECT (OTHER END)	20	3	TRIM	15	3	READY FOR TEST	10	3	MECHANICAL COMPLETE	10	3

WBS	No Progress	Erect Spool	Connect One End	Connect Other End	Trim	Ready for Test	Mech Complete
501	220	944	923	817	918	693	127

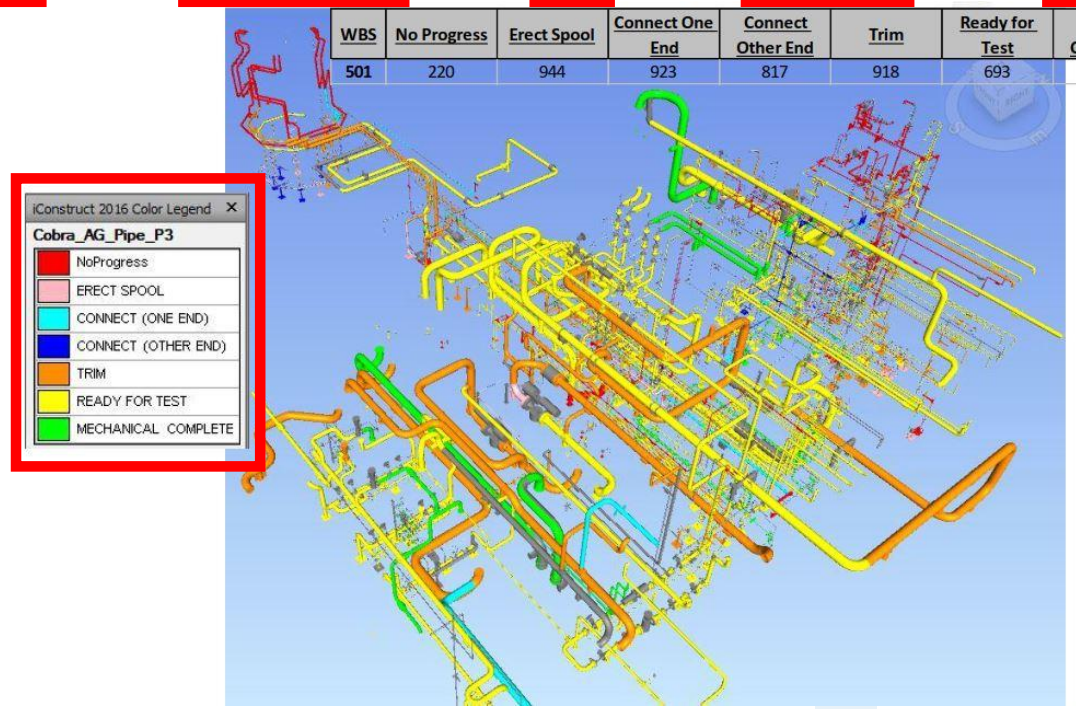

Proud history, bright future.

©2019 KBR Inc. All Rights Reserved.

Pipe Progress Measurement – Queries

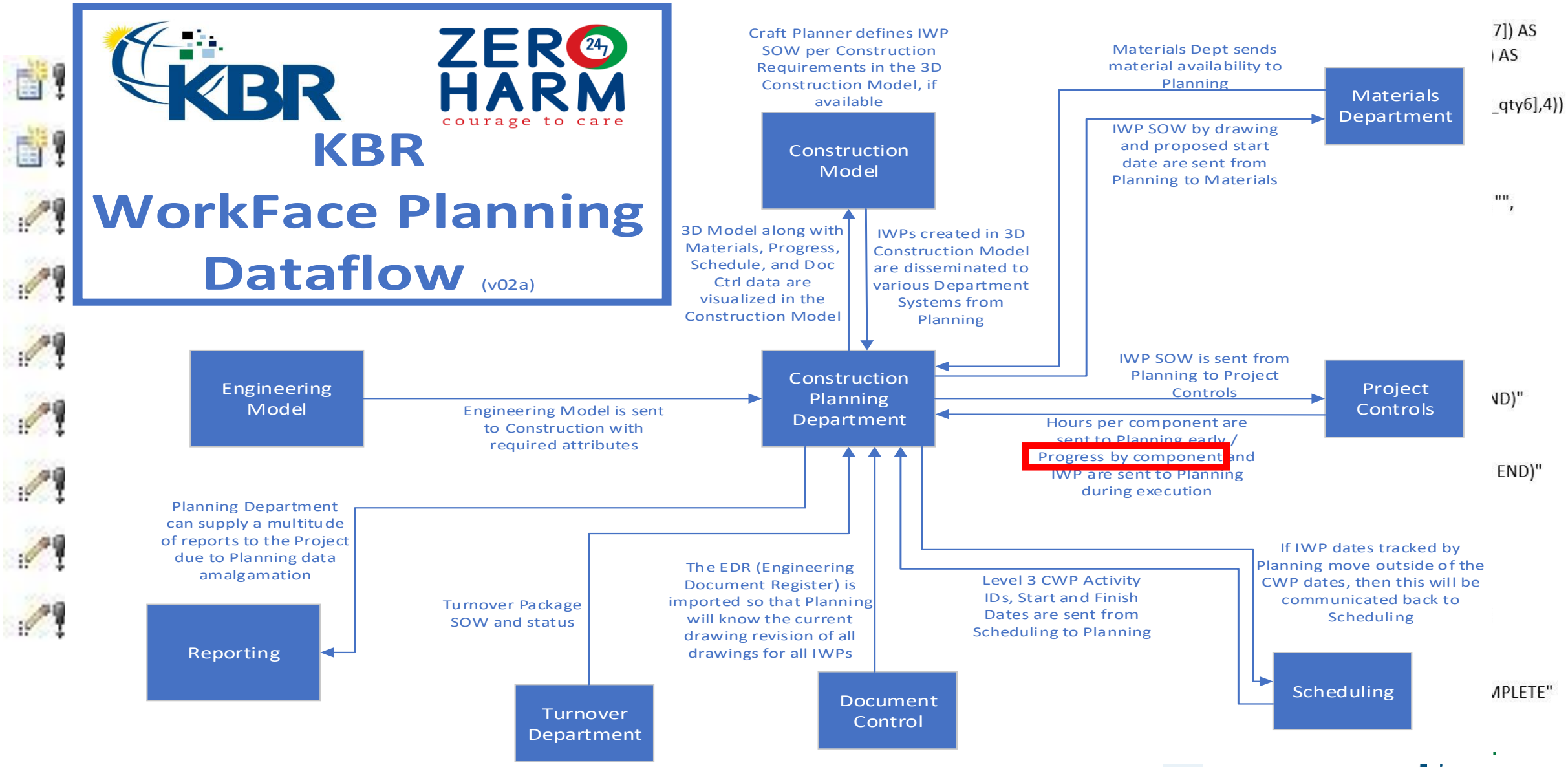

Proud history, bright future.

©2019 KBR Inc. All Rights Reserved.

The Future…

- Autodesk Construction Cloud
- KBR
- ExxonMobil

Automagically…

Proud history, bright future.

©2019 KBR Inc. All Rights Reserved.