AUTODESK UNIVERSITY

Using Autodesk Fusion 360 and Generative Design to Make Lighter Rockets in Less Time

DE501894

Charlie Aveline
Airframe and Recovery Team Lead
Kiran de Silva
Electronics and Payload Team Lead
Tanvi Gir
Former Airframe and Recovery Team Lead

IMPERIAL COLLEGE LONDON ROCKETRY
ESTD. 2018
ICLR

Our Teams

Airframe and Recovery

Propulsion

Electronics and Payload

Systems and Integration

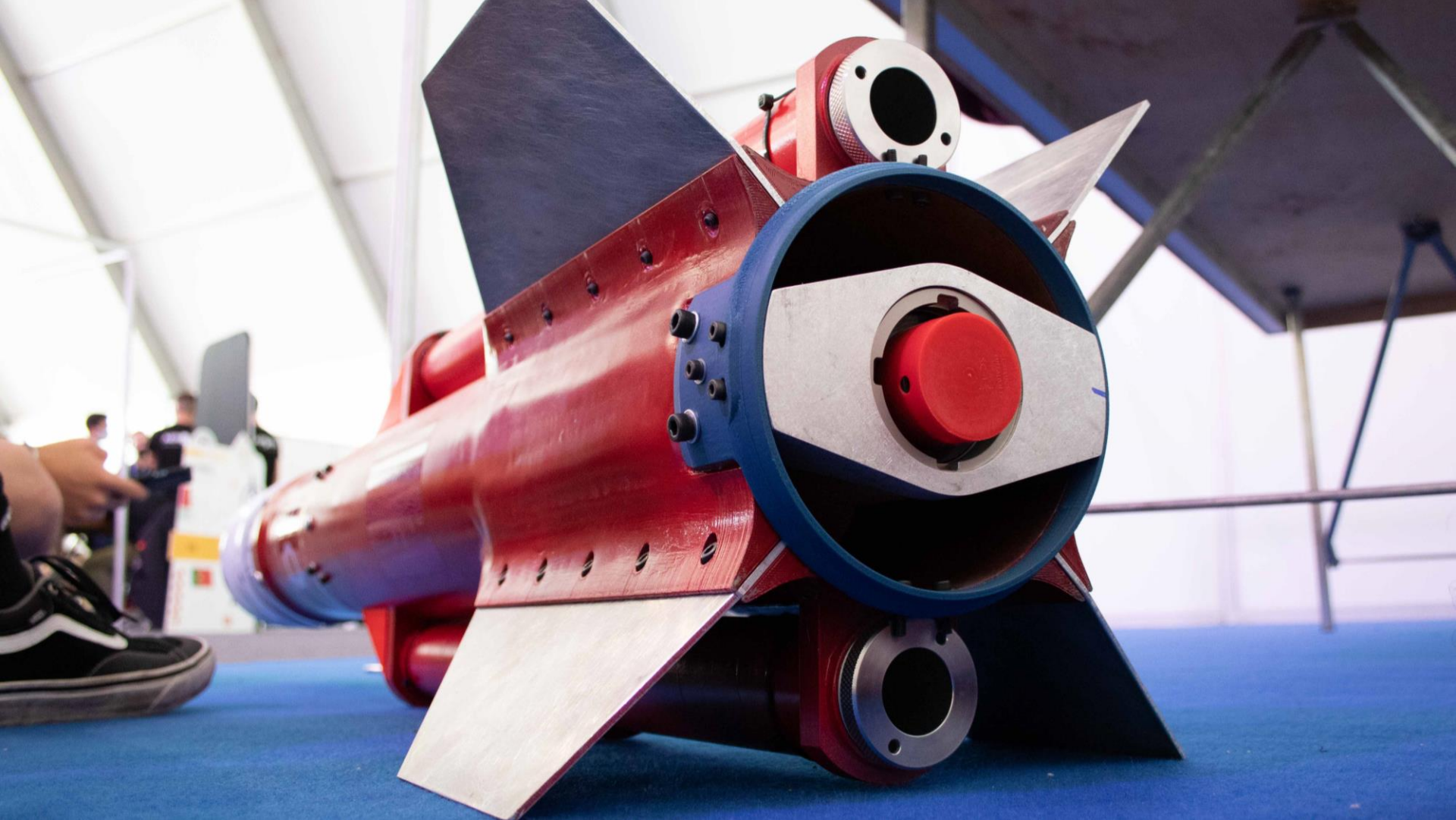

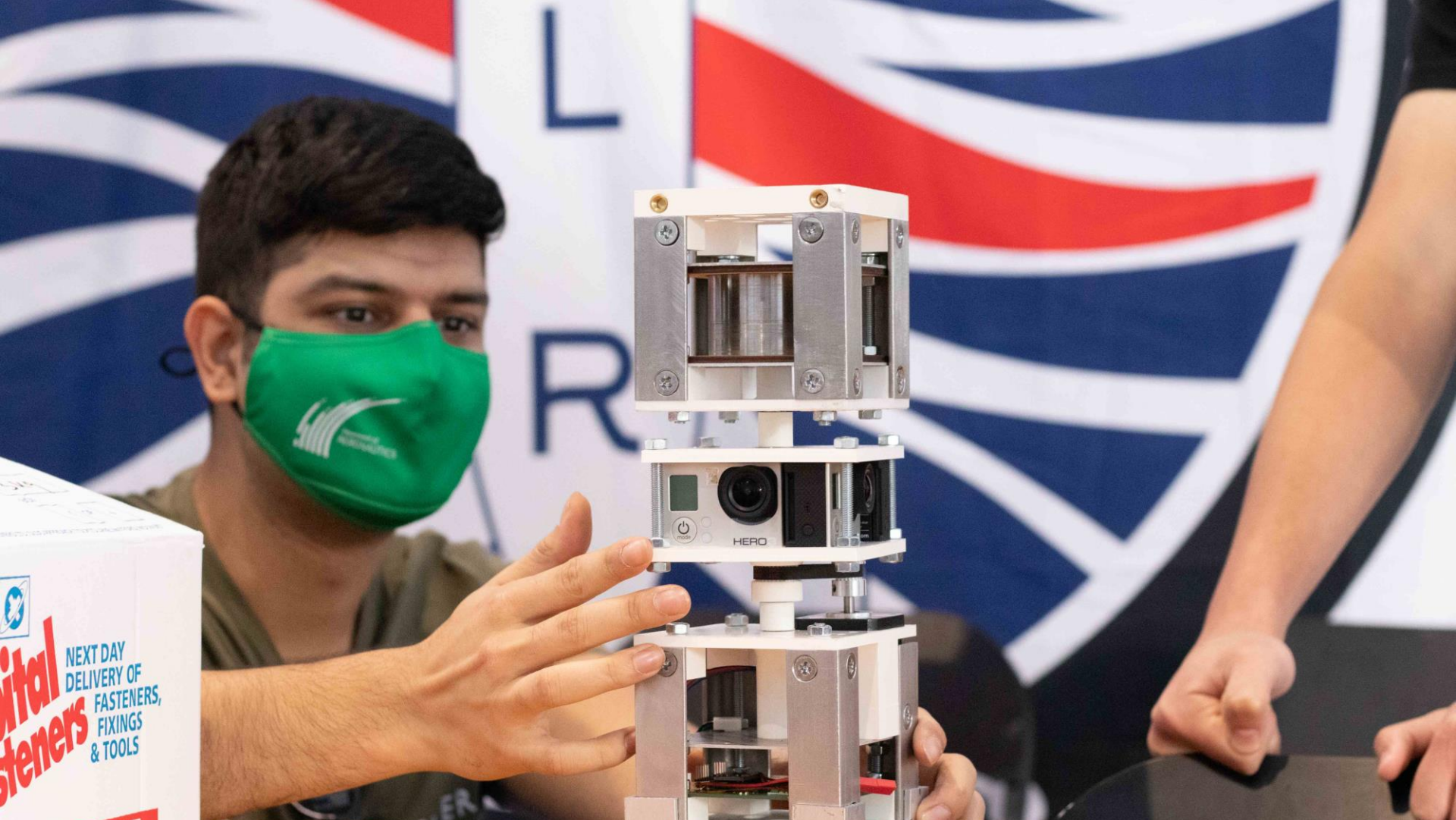
HERO
NEXT DAY
DELIVERY OF
FASTENERS,
FIXINGS
& TOOLS

1ST DIVISION
EUROC

AVIO

VALISPACE

Breakdown of a Rocket

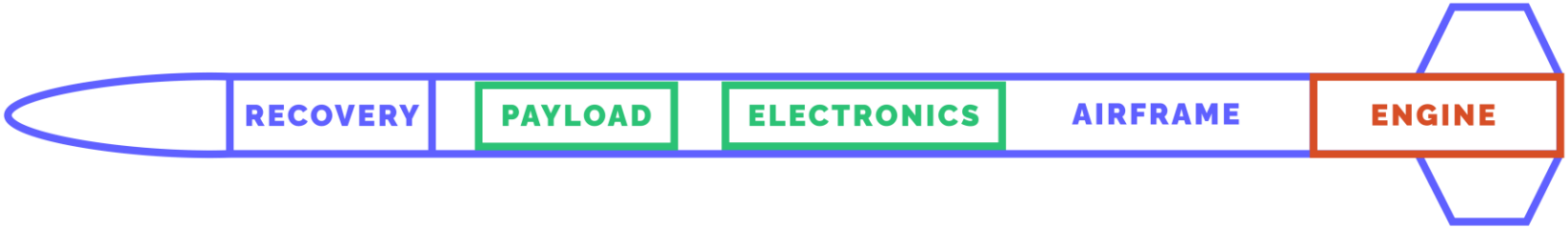

Image: European Rocketry Challenge

Competition Requirements

6.6 lbs Payload

3 km Altitude

Recover Safely

AUTODESK UNIVERSITY

The Design of Constant Impulse

Levels of Abstraction

Component

- Basic building block
- E:G Booster Stopper

System

- Integrated components
- E:G Airframe

Rocket

- Integrated systems
- E:G Constant Impulse

Requirements

Booster Stopper

- Transfer loads from each booster to the rocket
- Withstand the loads from the K class booster with a Safety Factor of 2
  - Total Impulse: 2372 N-s
  - Max. thrust: 1828.9 N
  - Burn time: 1.7 s
- Mount to the curved cylindrical surface of the airframe
- Minimize mass

Design Process

Requirements

Concept

CAD

Simulation

Simulations

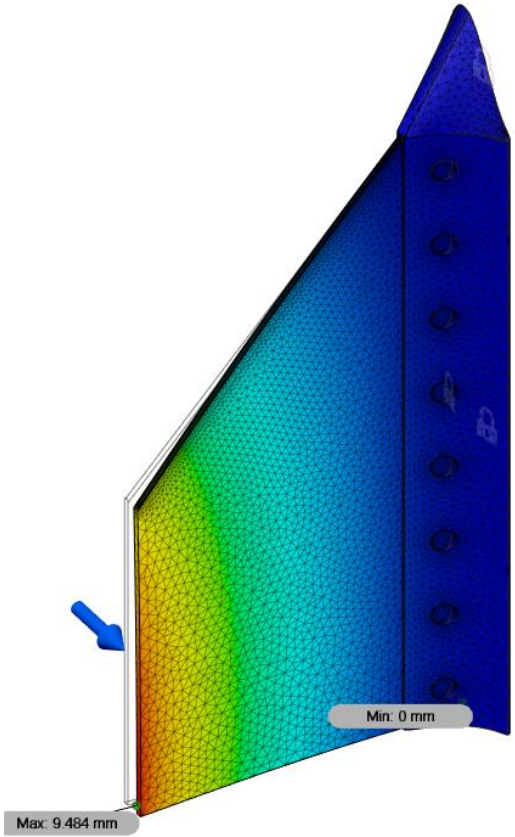

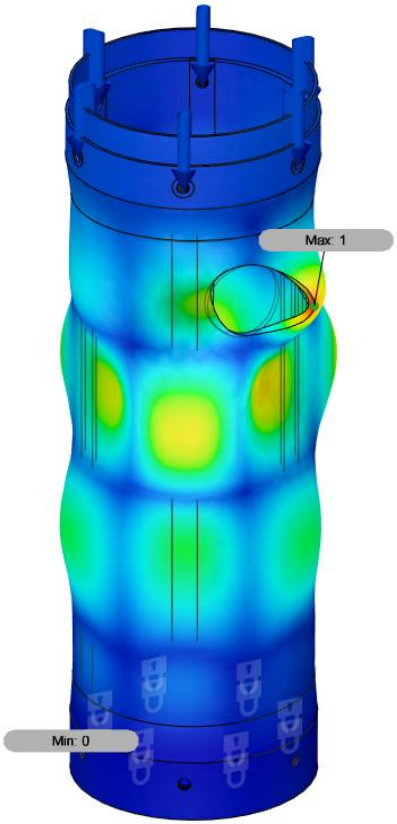

Loads & Constraints

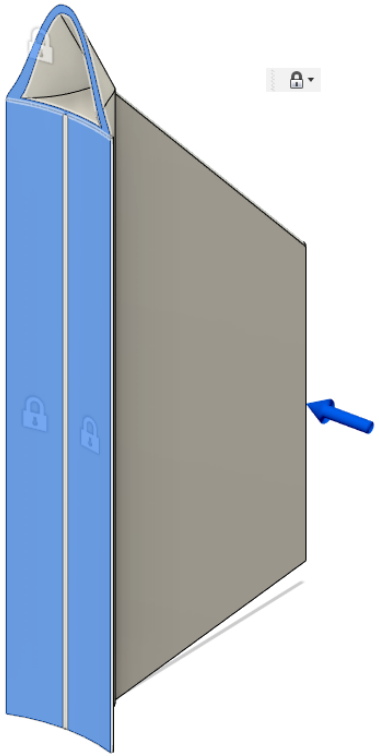

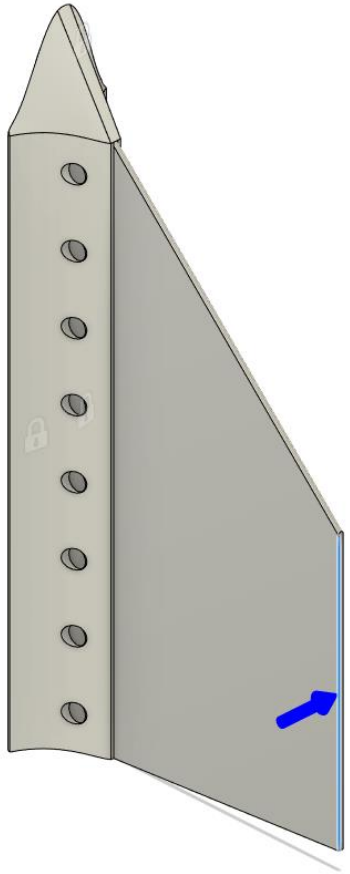

Rocket Load Cases

Thrust

Shock

Bending

Safety Factor

Actual Maximum Load / Target Maximum Load

Modified Part Design Process

Manual Design → Generative Design → Simulate → Assemble

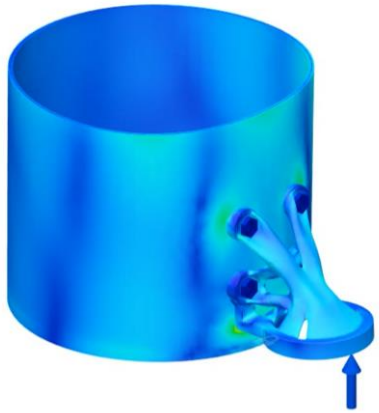

Generative Outcomes

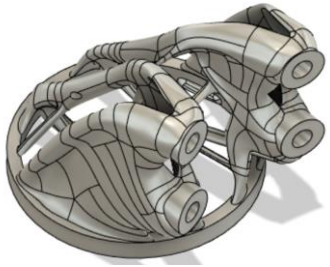

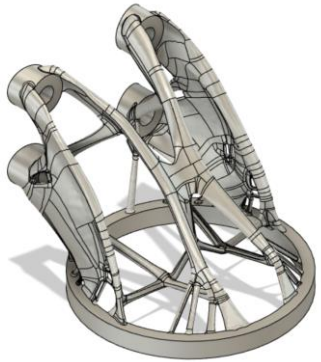

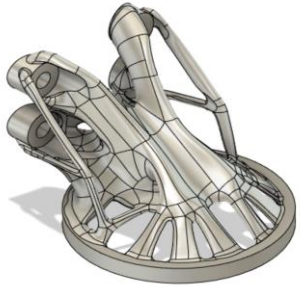

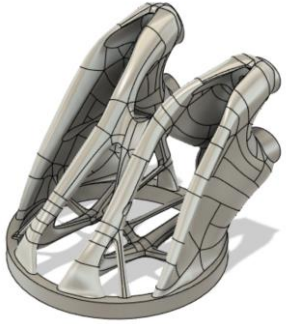

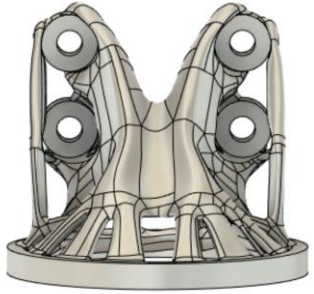

Comparison

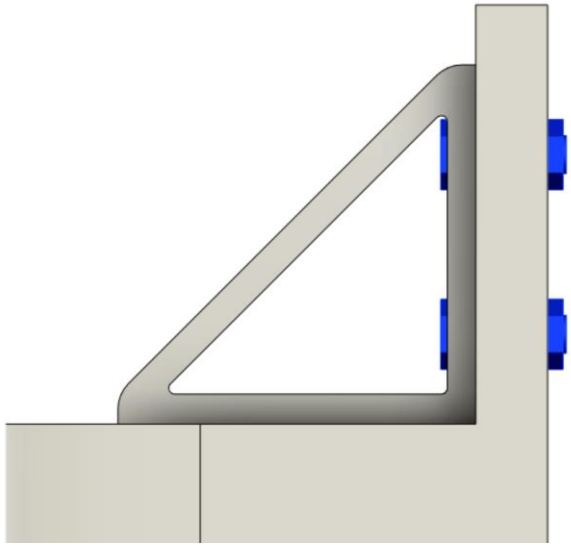

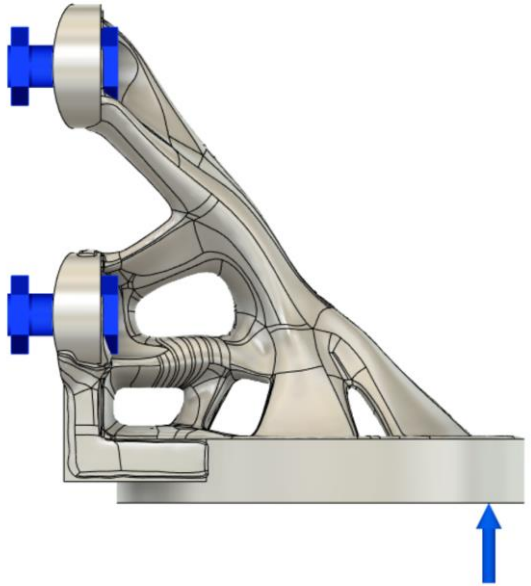

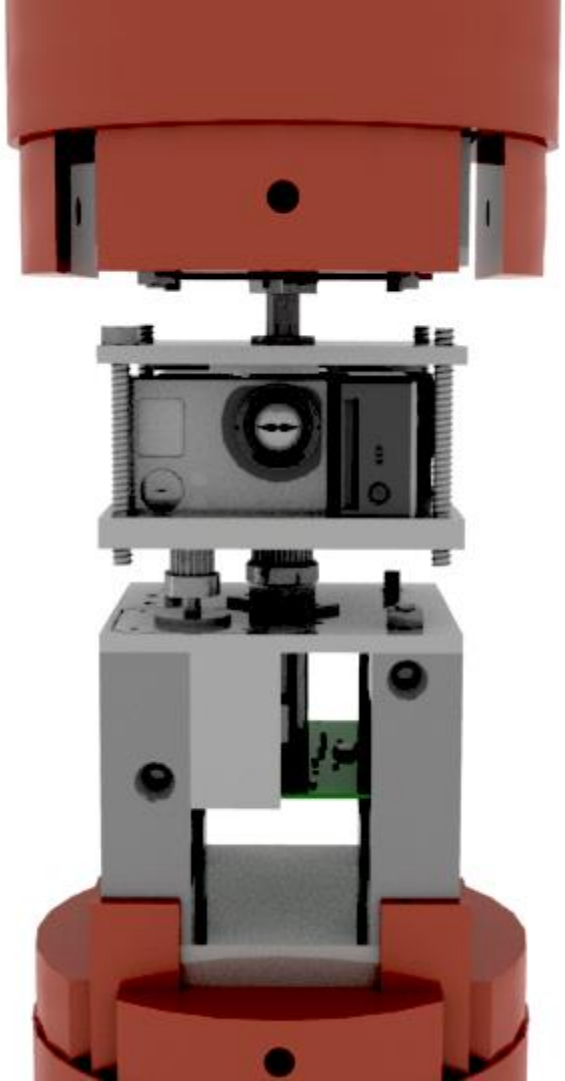

IMPERIAL COLLEGE LONDON ROCKETRY
I
C
L
R

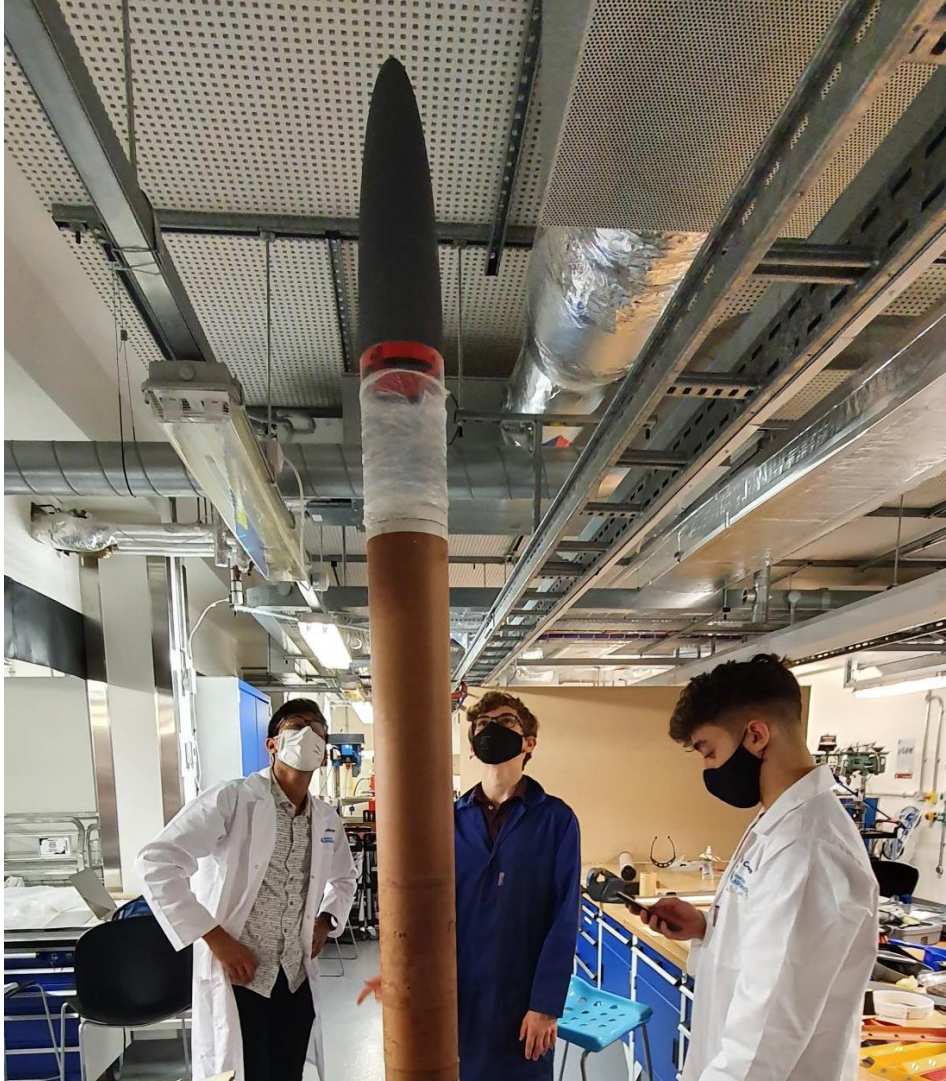

AUTODESK UNIVERSITY

EuRoC 2021

PIROTECNIA
OLEIRENSE

EUROC

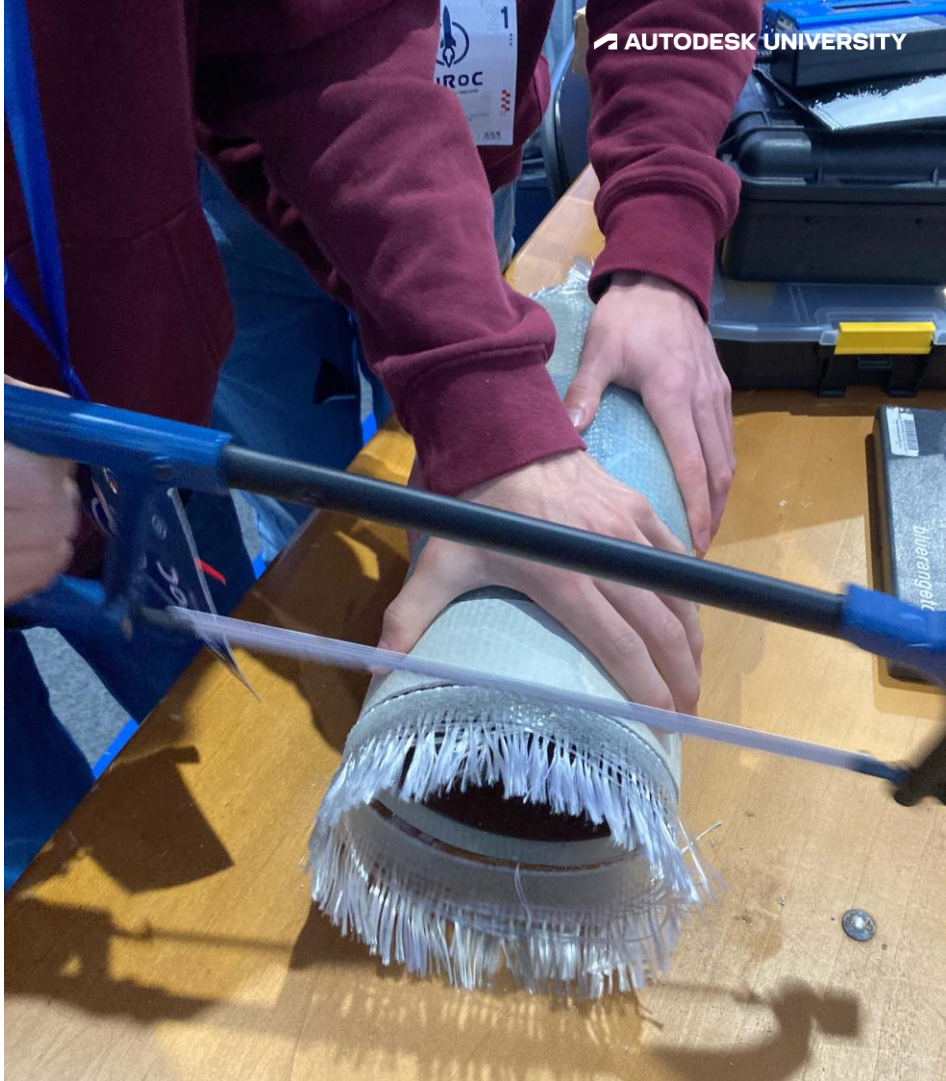

Constant Impulse

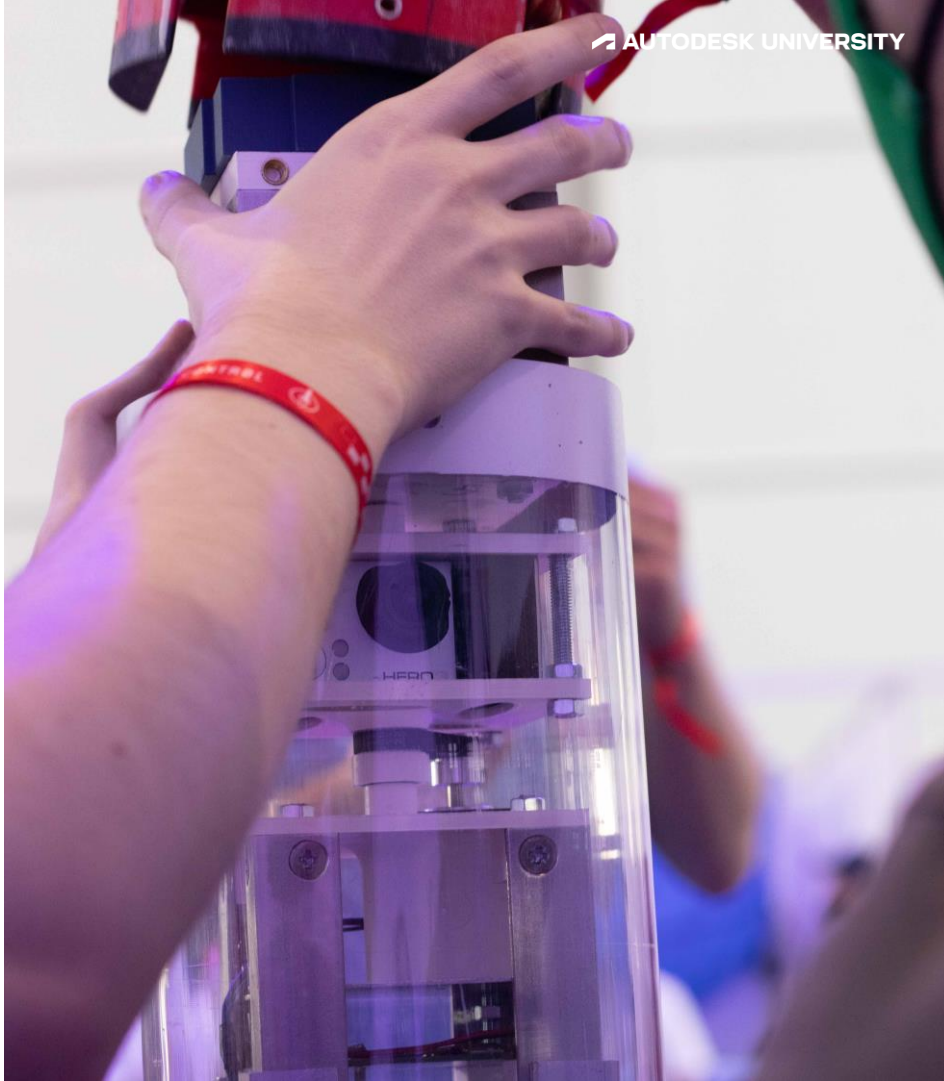

Astos
VALISPACE
Rocket
Imperial College London
AIRBUS

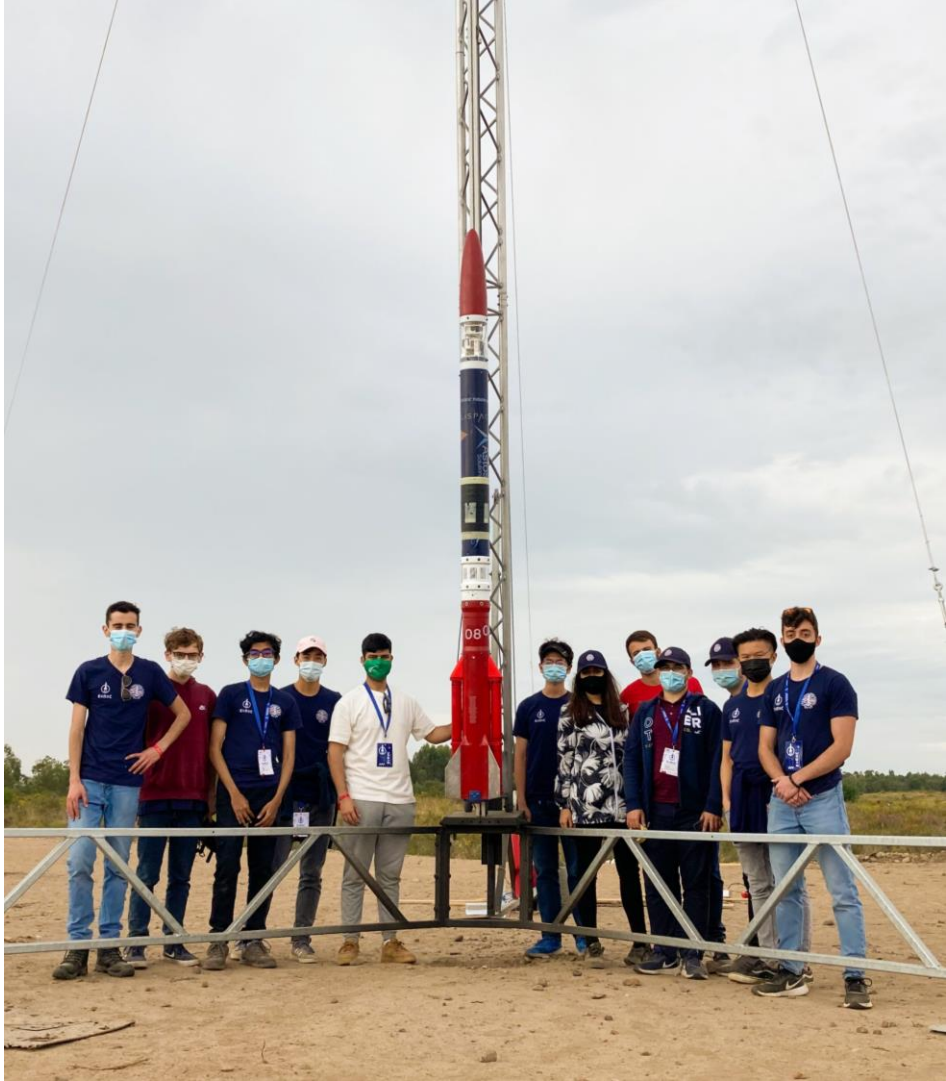

EUROPEAN
ROCKETRY
CHALLENGE
EUROC
EUROC
08
ICLR
Constant Impulse
EUROC
COLLEGE LONDON

AUTODESK UNIVERSITY

Present Day

Sporadic Impulse

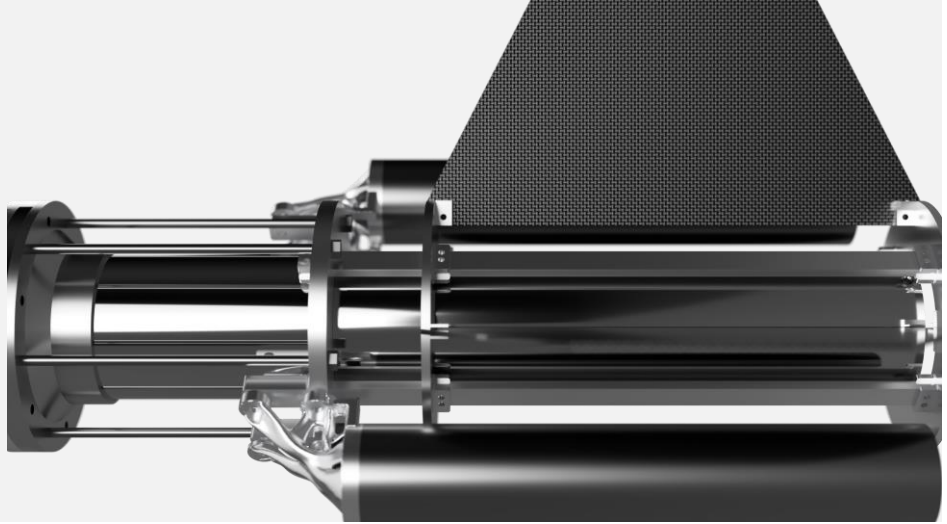

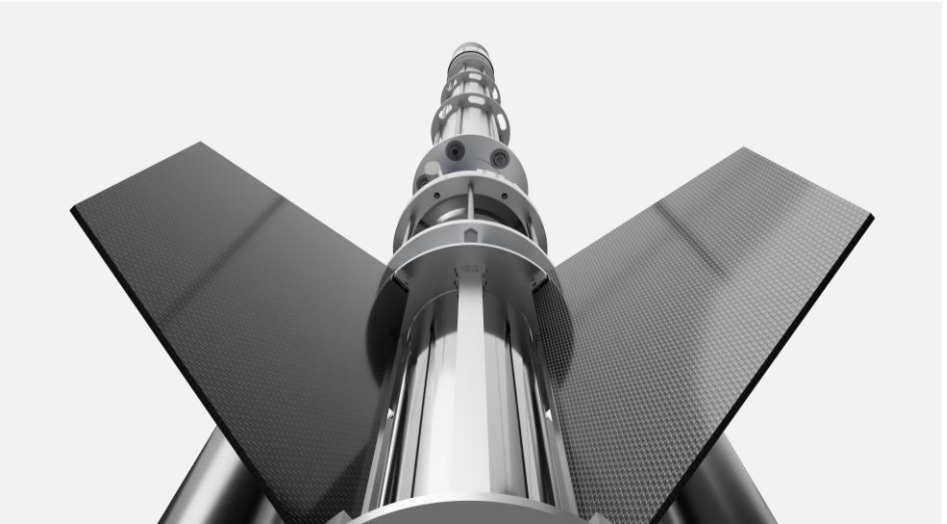

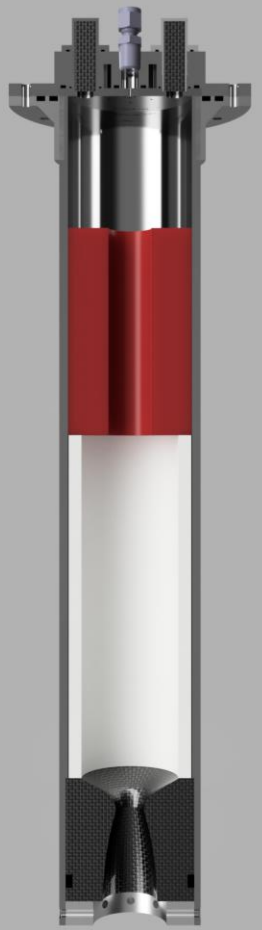

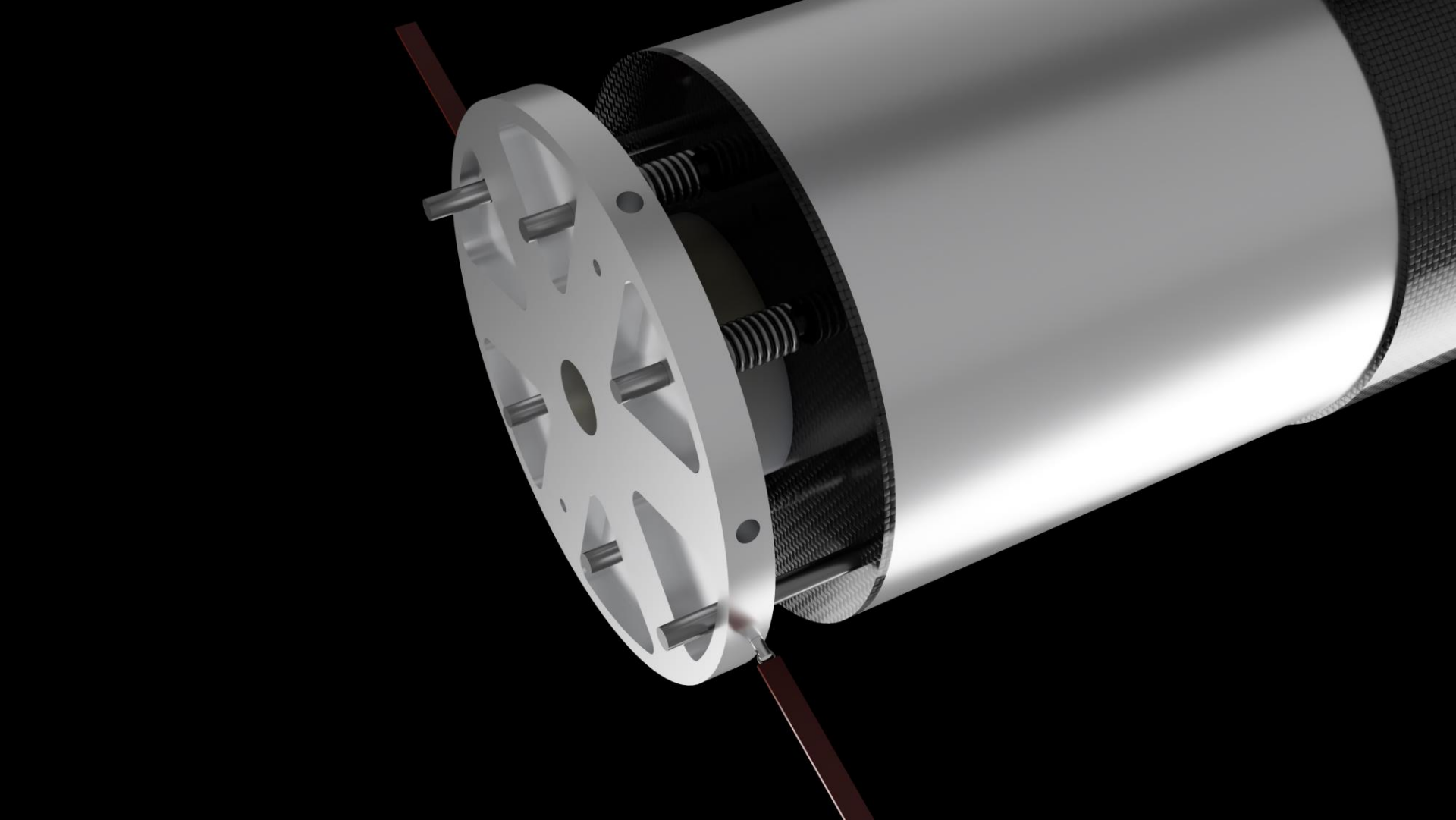

AUTODESK UNIVERSITY

The Future of ICLR

Advanced Projects

Images: Unsplash

Short Term Targets

EUROC

EUROPEAN ROCKETRY CHALLENGE

Images: European Rocketry Challenge, Spaceport America Cup

Autodesk and the Autodesk logo are registered trademarks or trademarks of Autodesk, Inc., and/or its subsidiaries and/or affiliates in the USA and/or other countries. All other brand names, product names, or trademarks belong to their respective holders. Autodesk reserves the right to alter product and services offerings, and specifications and pricing at any time without notice, and is not responsible for typographical or graphical errors that may appear in this document.

© 2022 Autodesk. All rights reserved.